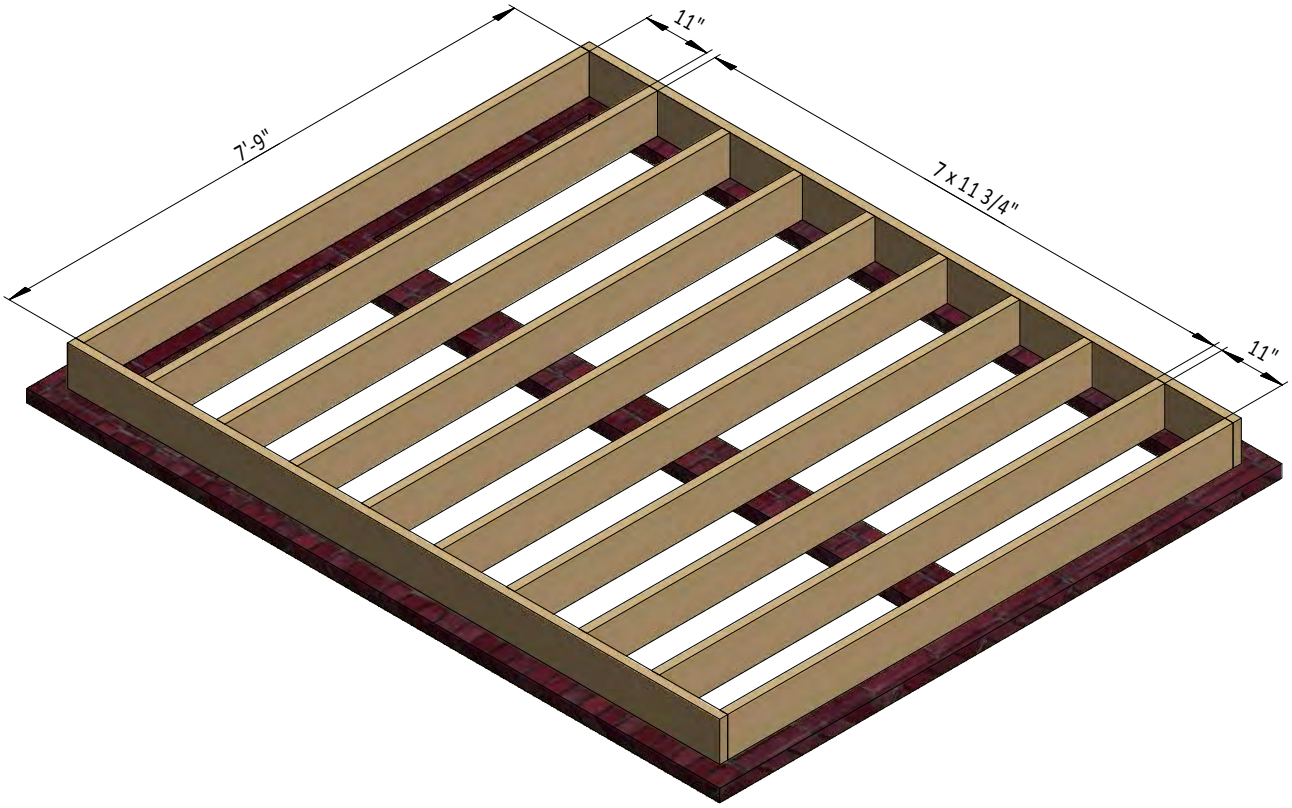

8'x10' Shed Floor Plan

8'x10' shed floor shopping list

Materials	Unit	Qty	Size	Note
Pressure-Treated Lumber 2’x8’	pcs	10	8’	Joists
Pressure-Treated Lumber 2’x8’	pcs	2	10’	Rim joists
Plywood 4’x8’	pcs	3	4’x8’	Sheathing
Wood screws (5")	pcs	100		
Wood screws (2")	pcs	100		

8'x10' shed floor cutting list

Materials	Unit	Qty	Size	Note
Pressure-Treated Lumber (11/2" x 7 1/4")	pcs	10	7'-9"	Joists
Pressure-Treated Lumber (11/2" x 7 1/4")	pcs	2	10'	Rim joists
Plywood (9/16")	pcs	3	3'-4" x 8'	Floor sheathing

Nominal vs actual pressure-treated lumber sizes

Nominal size	Actual size
1 × 2	$\frac{3}{4} \times 1\frac{1}{2}$
1 × 3	$\frac{3}{4} \times 2\frac{1}{2}$
1 × 4	$\frac{3}{4} \times 3\frac{1}{2}$
1 × 5	$\frac{3}{4} \times 4\frac{1}{2}$
1 × 6	$\frac{3}{4} \times 5\frac{1}{2}$
1 × 8	$\frac{3}{4} \times 7\frac{1}{4}$
1 × 10	$\frac{3}{4} \times 9\frac{1}{4}$
1 × 12	$\frac{3}{4} \times 11\frac{1}{4}$
2 × 2	$1\frac{1}{2} \times 1\frac{1}{2}$
2 × 3	$1\frac{1}{2} \times 2\frac{1}{2}$
2 × 4	$1\frac{1}{2} \times 3\frac{1}{2}$
2 × 6	$1\frac{1}{2} \times 5\frac{1}{2}$
2 × 8	$1\frac{1}{2} \times 7\frac{1}{4}$
2 × 10	$1\frac{1}{2} \times 9\frac{1}{4}$
2 × 12	$1\frac{1}{2} \times 11\frac{1}{4}$
4 × 4	$3\frac{1}{2} \times 3\frac{1}{2}$
4 × 6	$3\frac{1}{2} \times 5\frac{1}{2}$
4 × 8	$3\frac{1}{2} \times 7\frac{1}{4}$
6 × 6	$5\frac{1}{2} \times 5\frac{1}{2}$
8 × 8	$7\frac{1}{2} \times 7\frac{1}{2}$

STEP 1

Framing the Floor

1.1 Construct the frame using 1 1/2” x 7 1/4” treated lumber. You will need two boards cut to 10’ for the front and back rim joist and two boards cut to 7'-9” for the side joists.

1.2 Use 8x5" Phillips flat head wood screws to connect the beams.

1.3 Check the corners to make sure they are 90°. All corners in the garden shed need to be square.

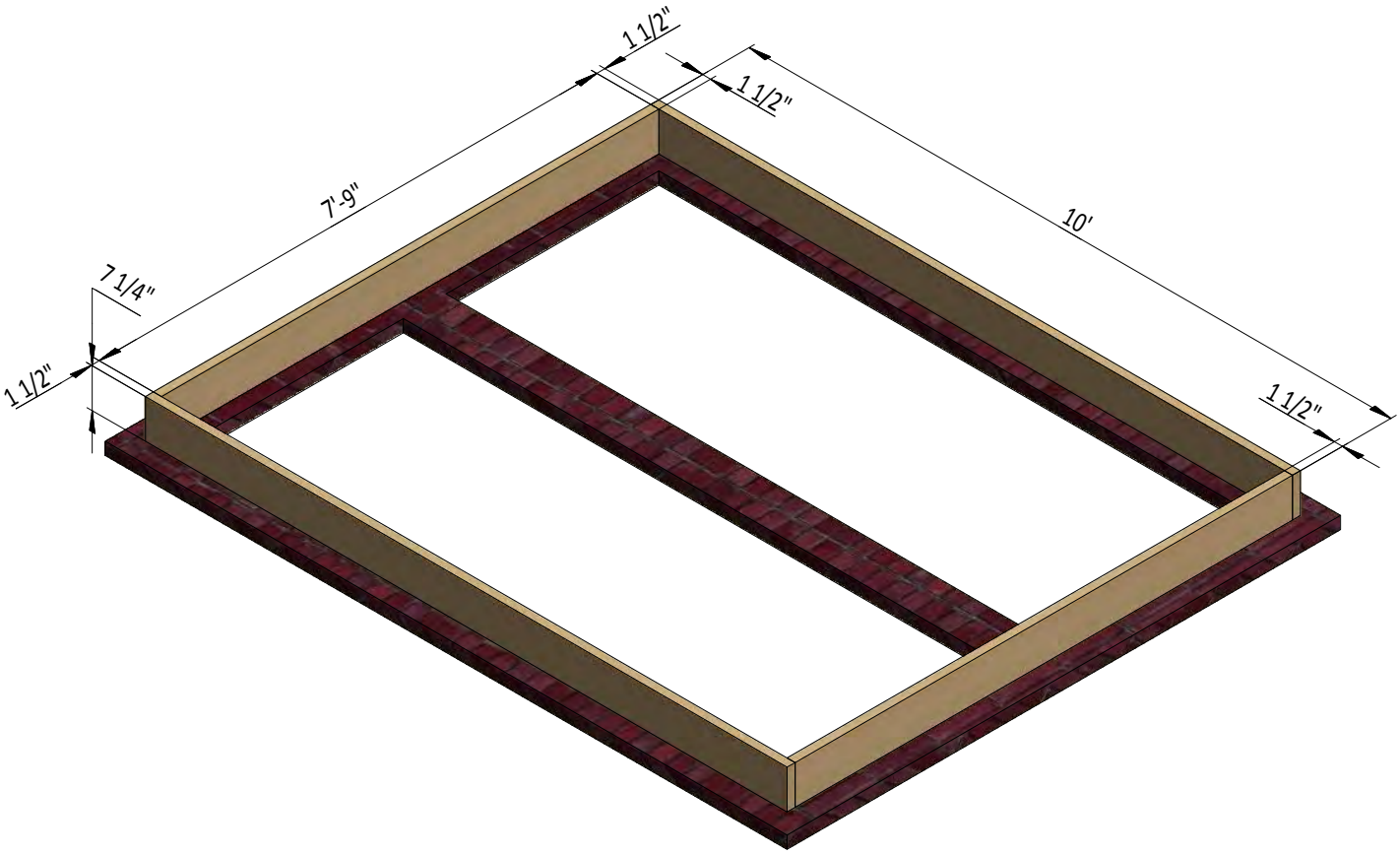

STEP 2

Framing the Floor

2.1 Make the frame with 1 1/2” x 7 1/4” pressure-treated lumber. You will need eight boards cut to 7'-9" for the floor joists.

2.2 Attach the beams with 8x5" Phillips flat head wood screws.

2.3 Using the square of your choice, check the corners to make sure they are 90°.

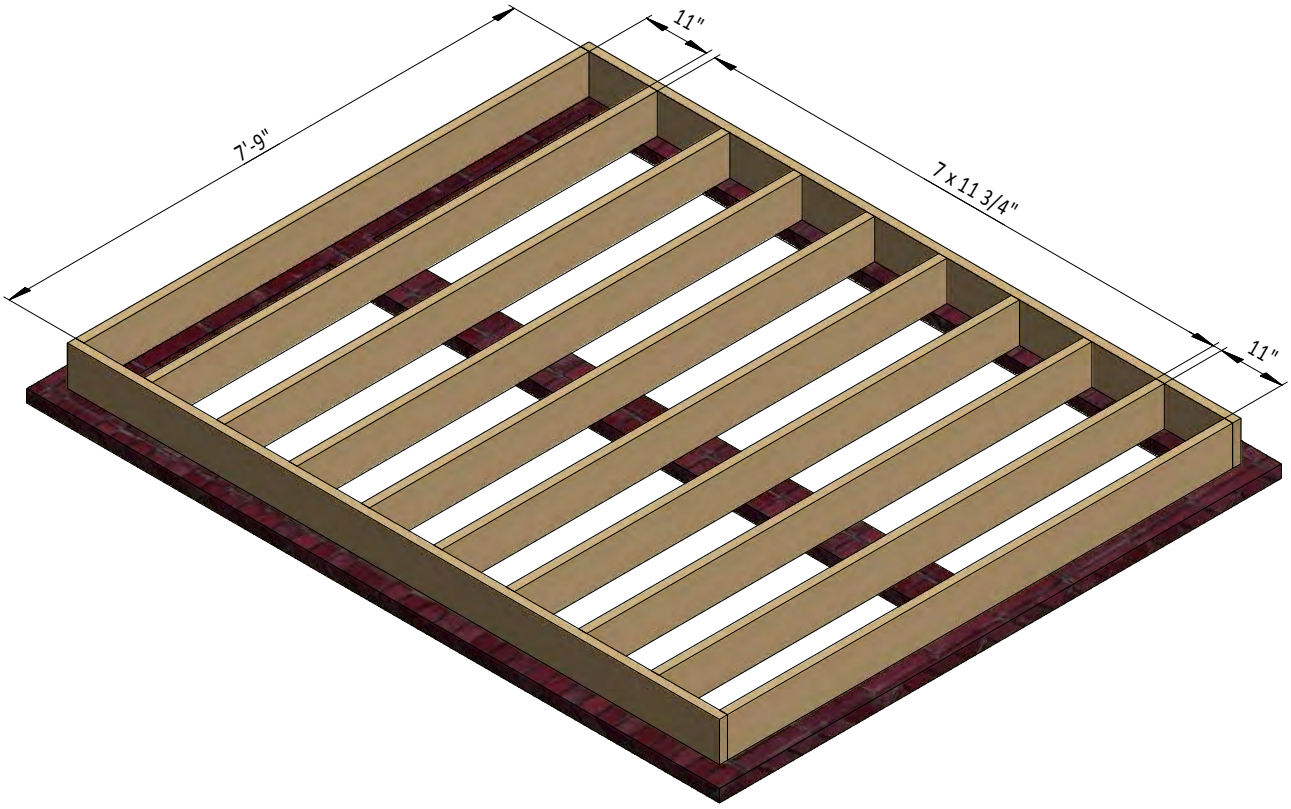

STEP 3

Install the Plywood Floor

3.1 Cut three 3'-4" x 8' sheets from the 9/16" plywood for the floor covering according to the drawing.

3.2 Attach the plywood pieces with 2" flat head Phillips wood screws.

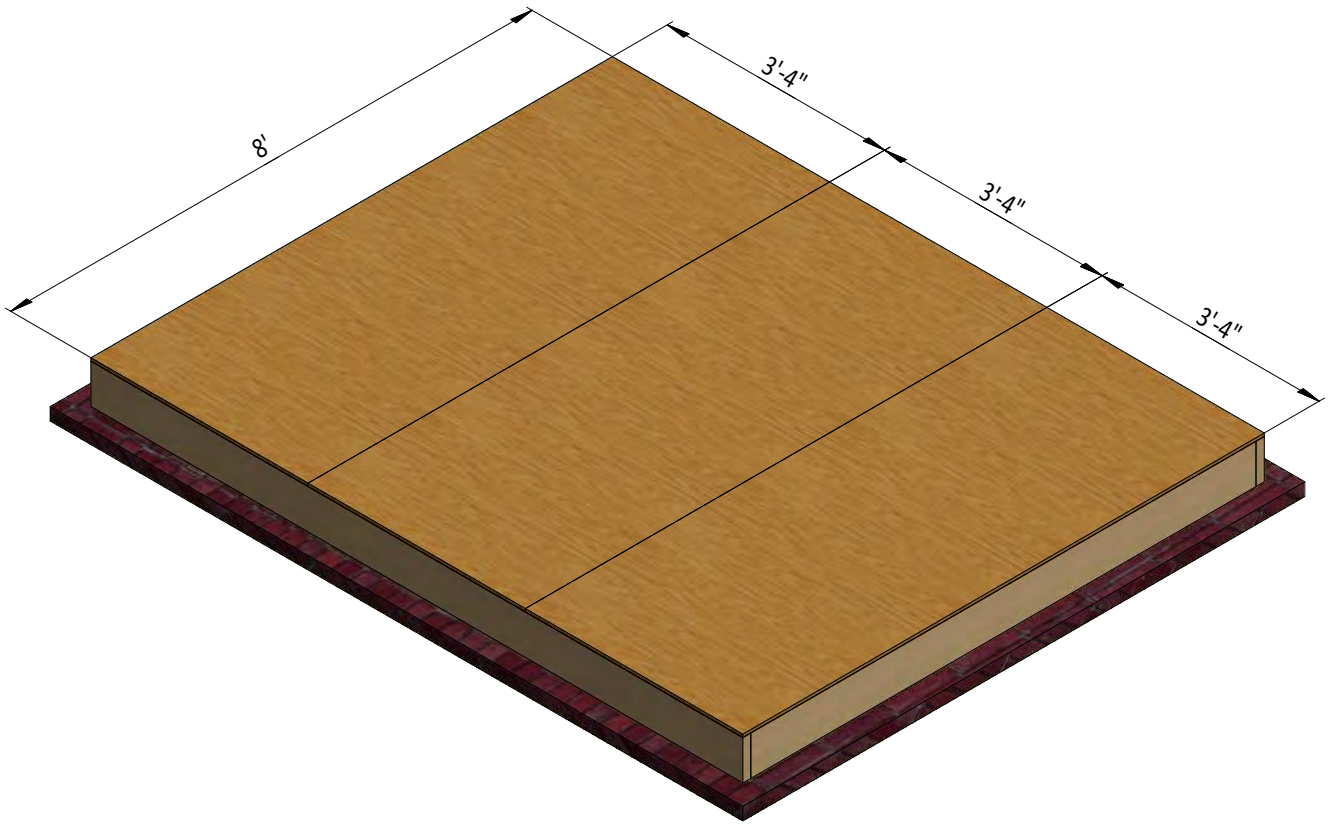

Build an Entire Shed with Premium 8x10 Shed Plans

Benefits includes

- ✅ Full materials list, including hardware
- ✅ Full cut list for the lumberyard
- ✅ Easy step-by-step instructions for beginners
- ✅ Instructions for siting and installing the foundation
- ✅ Guide for building windows and doors from scratch
- ✅ Plans for decorative elements such as shutters and lattice
- ✅ Diagrams for installing a gutter system
- ✅ Ready-to-print plans for easy reference

8×10 Gable shed plan

8×10 Gable shed plan

For more great **HOW-TO** plans please visit: **https://shedplans.org**

Copyright

The text and illustrations that appear here are the exclusive property of shedplans.org and are protected by federal copyright laws. The duplication, sale or distribution of any portion of these plans without prior written consent from the original designer will be subject to the appropriate penalties for copyright infringement. Sharing this plan on the web is only permited with an indicated original source: https://shedplans.org